Arktis Laser Product Datasheet

LRS-00320 DPSS Laser System

Series Specifications:

Nominal Wavelength	320 nm
Output Type	CW
Laser Source Type	DPSS

Overview:

The LRS-0320 Series of Diode-Pumped Solid-State (DPSS) Lasers are ideal for applications requiring up to 25 mW of 320 nm UV laser light with a long operating lifetime at an aggressively competitive cost.

These lasers are commonly used for fluorescence excitation and a broad spectrum of other applications. The driver is available as a complete FDA-compliant system or as an O.E.M. component with significantly reduced dimensions.

Laserglow products are currently being used by some of the World's top universities and other prominent research facilities.

Key Features:

- Air cooled - no need for water cooling or external chiller
- Lightweight, compact design
- Efficient DPSS technology runs on standard AC power (85 - 264 V, 47 - 63 Hz)
- >10,000 hours continuous maintenance-free operating life
- TTL and Analog modulation (input via BNC connector) *lab-spec models only*
- Adjustable output power (via lockable dial) *lab-spec models only*
- LED display showing LD current, laser cavity temperature *lab-spec models only*
- FDA CDRH Compliant Class IIIb / Class IV enclosure
- 48-hour replacement coverage available for an additional fee on specific models

Package Includes:

- Laser Head
- Driver/Power Supply
- Power Cable
- Keys, Safety Interlock
- Hard-shell Carrying Case

Specifications:

This spec sheet has been generated specifically for part number R32-F, per your request, and data for the entire series is also displayed for your reference. The specs which are specific to R32-F have been highlighted below in **red + bold**.

Output Power (mW)	**>3**, **>5**, **>10**, **>20**
Output Power Stability (%RMS/4h)	**<3**, **<5**
Central Wavelength (nm)	**320**
Wavelength Tolerance (+/- nm)	**1**
Divergence (mrad, full angle)	**<2**
Beam Dimensions (mm, 1/e²)	**3**
Warm-up Time (minutes)	**10**
M²	**<2**
Polarization Ratio	**>50**
Beam Pointing Stability (mrad)	**<0.05**
Operating Temperature Range (°C)	**10 to 35**
Max. Analog Modulation Freq. (Hz)	**10000**
Max. TTL Modulation Freq. (Hz)	**10000**
Modulation Input Signal	**0-5 VDC**
Max. Power Input Duty Cycle	**100%**
Standard Warranty (months)	**12**
MTTF (operational hours)	**10000**
Weight of Product or Laser Head (kg)	**1.6**
Beam Height from Base Plate (mm)	**45**
Dimensions of Product or Laser Head (mm)	**211.5 (l) x 88 (w) x 74 (h)**

CW: All specifications are based on performance at full output power and after the specified warmup period. Output characteristics may change if the laser is run at a different power level.
Q-Switched: Specifications are based on the laser pulsing at the specified design frequency. Output characteristics may change if the laser is run at a different frequency.

Power Supply Options:

These lasers are available with several different power supply options. The model that you have selected is highlighted below, and any other options are shown for easy reference.

	Power Supply Type:	**FF**
FDA-Compliant LabSpec	Input Power	**85v to 264v**
	Power Supply Weight (kg)	**2.6**
	Dimensions (mm)	**268 (l) x 145 (w) x 106 (h)**

*Power supply may not be exactly as shown, see dimensional drawings on next 2 pages.

*Dimensions for fiber-integrated (I_) include laser head packaged inside.

Regulatory Classification:

The model you have selected (R32-F) requires the following safety label(s):

Dimensional Drawing - Laser Form Factor: F:

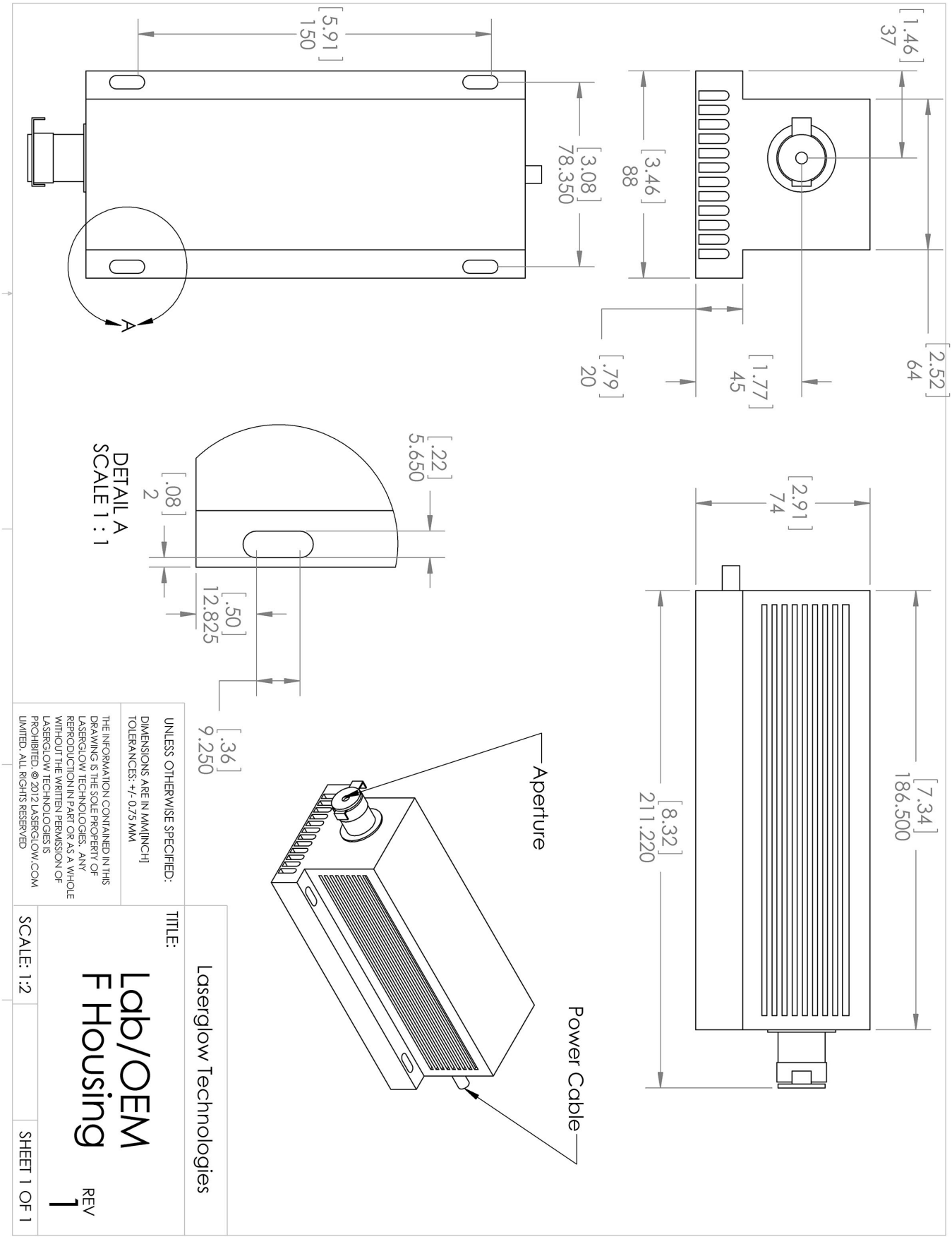

Dimensional Drawing - Power Supply Form Factor: FF:

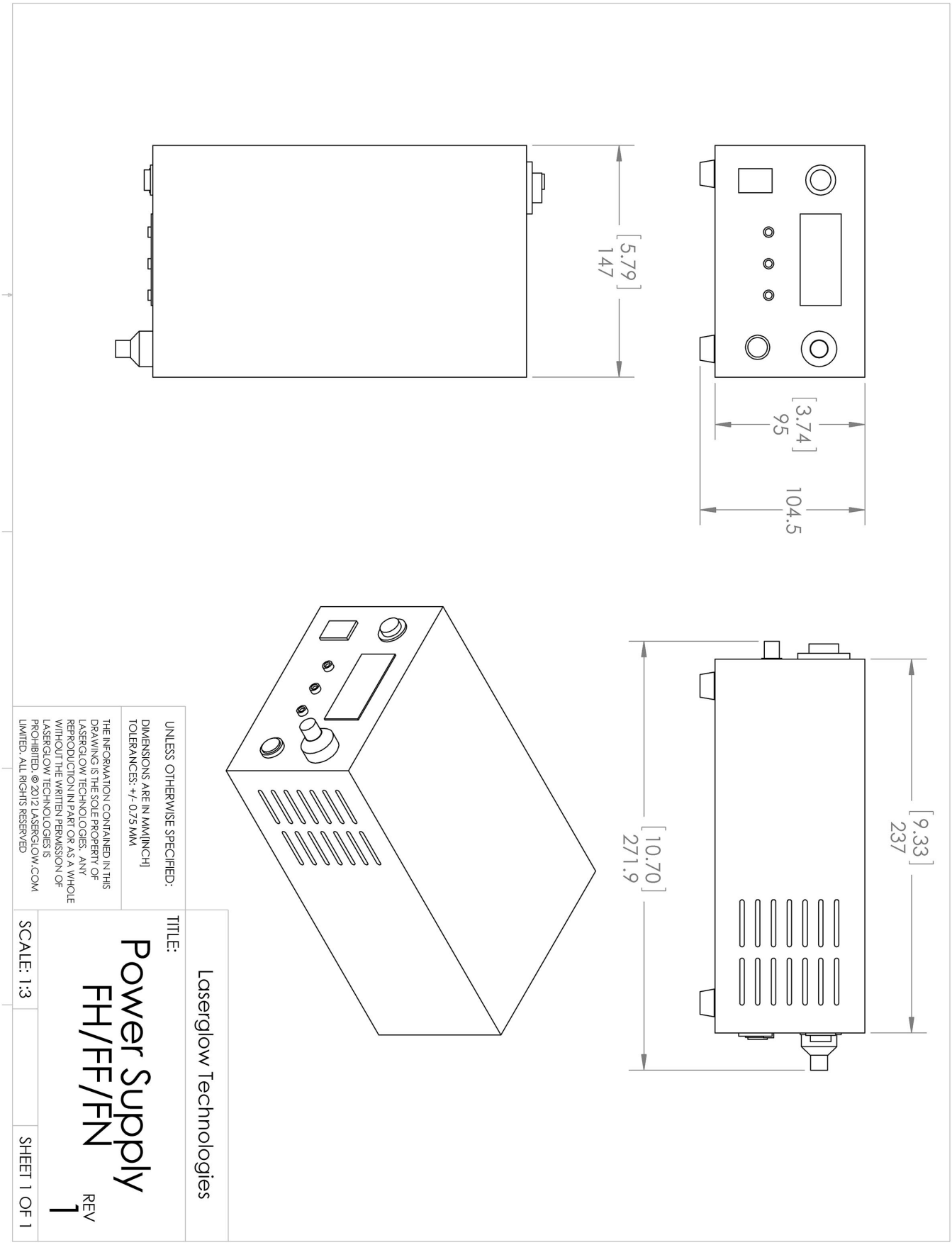

Accessories:

The most popular accessories for model R32-F are shown below. For additional details regarding these or other accessories please see our website or contact us directly.

Part Number	Description	
ACALBHFXX	Carrying Case-103 Holds Lab/OEM H, F and O size Standard/LabSpec laser Full Details: www.arktislaser.com/ACA	Included With Laser
AGF5327XX	LSG-532-NF-7 Fit-Over Safety Goggles 532nm Output: OD 7+ at 190-532 nm CE Certified Full Details: www.arktislaser.com/AGF	
AFS2002XX	Armored Fiber With SMA 905 Connectors 200um Core Multimode 2 m length Full Details: www.arktislaser.com/AFS	
AFF2002XX	Armored Fiber With FC/PC Connectors 200um Core Multimode 2m length Full Details: www.arktislaser.com/AFF	
ACSUV1HXA	SMA Fiber Coupler/Collimator for ultraviolet wavelengths (266 to 399 nm) (installed and aligned) 11mm diameter input lens Full Details: www.arktislaser.com/ACS	
ACFUV1HXA	FC/PC Fiber Coupler/Collimator for ultraviolet wavelengths (266 to 399 nm) (installed and aligned) 11mm diameter input lens Full Details: www.arktislaser.com/ACF	
TBKMFI001	Optics Kit Breadboard Mounting Kit for F-size Lasers Includes 9x4x0.5 riser, hardware Full Details: www.arktislaser.com/TBK	

FOR MORE INFORMATION PLEASE CONTACT:

Arktis Laser
112 Elizabeth St, Unit 5-331, Toronto, ON, Canada M5G 1P5
Tel. 1-416-886-1178 Fax 1-647-874-7129
sales@arktislaser.com www.arktislaser.com

E&OE: Data included in this sheet may be subject to change without notice.
Please confirm critical specifications with our staff prior to ordering.